Kylan Thornburg
ECEN 252

1.

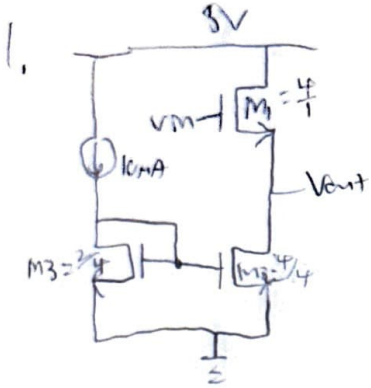


$k_n' = 160\mu A/V^2$, $\lambda_n = .02$, $\lambda' = .1$, $V_{TN} = .6V$

a. This is a common source

b. $I_{D2} = 2I_{D1} = 20mA$

$20mA = \frac{1}{2}(160\times10^{-6})\frac{4}{1}(V_{ov}^2)$

$V_{ov_1} = .25$

$20mA = \frac{1}{2}(160\times10^{-6})1(V_{ov}^2)$

$V_{ov_2} = .5$

$V_{in} \geq V_{ov_1} + V_{ov_2} + V_{TN}$

$V_{in} \geq 1.35$

$V_{in} \leq 5$

$\boxed{\text{range: } 1.35V \leq V_{in} \leq 5V}$

c.

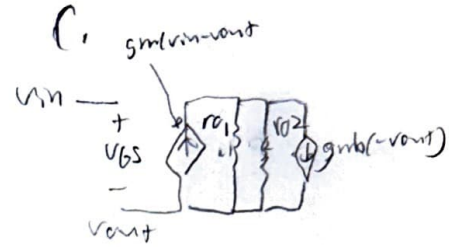


d.

$R_{in}$ : open circuit $= \infty\Omega$

$R_{out} = r_{o1} \| r_{o2} \| \frac{1}{g_m} \| \frac{1}{g_{mb}}$

$r_{o1} = r_{o2} = \frac{1}{.02(20mA)} = 2.5M\Omega$

$r_{o1} \| r_{o2} = 1.25M\Omega$

$g_m = \frac{2I_D}{V_{ov_1}} = 1.6\times10^{-4}$

$g_{mb} = \chi(g_m) = .1(1.6\times10^{-4})$

$R_{out} = 1.25M \| \frac{1}{1.6\times10^{-4}} \| \frac{1}{1.6\times10^{-5}}$

$= \boxed{5668.934\Omega}$

$\boxed{A_v = g_m R_{out} = .907 \text{ V/V}}$

2.

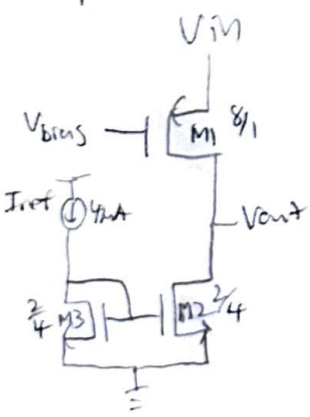


$k_n' = 160\mu A/V^2$ $\lambda_n = .02$ $\lambda_n = \lambda_p = .1$

$k_p' = 100\mu A/V^2$ $\lambda_p = .01$ $V_{TN} = V_{TP} = .7V$

a. common gate amp

b. $V_{BIAS} = V_{in} - V_{GS_1}$

$V_{Bias} = 4.2 - .8 = 3.4V$

$4mA = \frac{1}{2}(100\mu A/V^2)(\frac{8}{1})V_{ov_1}^2$

$V_{ov_1} = .1V$

$V_{GS1} = V_{ov_1} + V_{TP} = .8V$

c.

$4mA = \frac{1}{2}(160\mu A/V^2)\frac{2}{4}V_{ov_2}^2$

$V_{ov_2} = .316V$

$4.2 - V_{o1} \leq 4.1$

$\boxed{.316V \leq V_{out} \leq 4.1V}$

d.

e. $R_{in} = \frac{1}{g_m + g_{mb}}\left(1 + \frac{r_{o2}}{r_{o1}}\right)$

$r_{o1} = \frac{1}{.01(4mA)} = 25M\Omega$

$r_{o2} = 12.5M\Omega$

$r_{o1}/2$

$g_m = \frac{2I_D}{V_{ov1}} = \frac{2(4mA)}{.1} = 8\times10^{-5}$

$g_{mb} = .1(g_m) = 8\times10^{-6}$

$R_{in} = \frac{1}{8\times10^{-6} + 8\times10^{-5}}\left(1 + \frac{12.5}{25}\right) = 17045.45\,\Omega$

$R_{out} = r_{o1} \| r_{o2} = 8.\overline{3}M\Omega$

$A_v = (g_m + g_{mb} + \frac{1}{r_{o1}})(R_{out}) = 733.\overline{6}$ V/V

3.

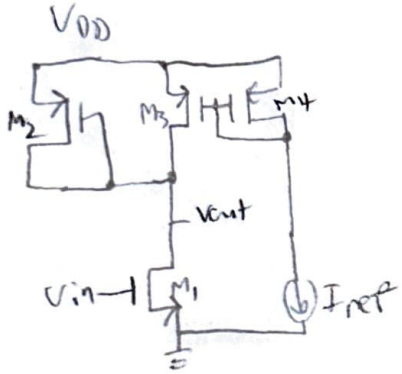


a.

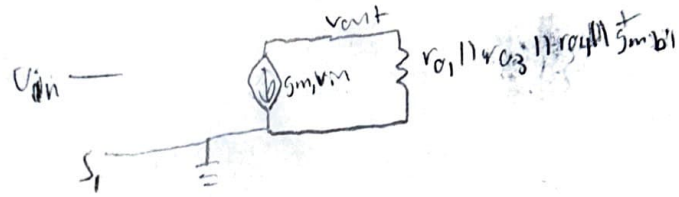


b. $R_{in} = \infty\,\Omega$ b/c open

$R_{out} = r_{o1} \| r_{o3} \| r_{o4} \| \frac{1}{g_{mb1}}$

$A_v = -g_m(R_{out})$

4.

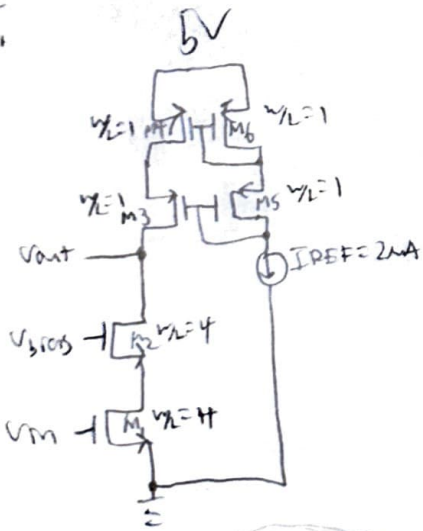


$K_p = 150$

$K_n = 200$

$\gamma_n = .04$

$\lambda_p = .02$

$\lambda_n = .1$

$V_T = .5$

a. $M_1$ and $M_2$

b. $2mA = \frac{1}{2}(200\times10^{-6})4\,V_{ov1}^2$

$V_{ov1} = \frac{1}{10\sqrt{2}}V = \frac{\sqrt{2}}{20}V$

$V_{ov1} + V_t = \frac{10+\sqrt{2}}{20}V$

$V_{ov2} = \sqrt{\frac{2m}{2(200\times10^{-6})}} = V_{ov1}$

$V_{ov2} + \frac{10+\sqrt{2}}{20} = \frac{10+2\sqrt{2}}{20} = \frac{5+\sqrt{2}}{10}V$

$\approx .641V$

c. Part b I think he means

$V_{Bias} = .741V$

$.741 - .5 = .241V$

$.241 \le V_{out} \le ?$

$2mA = \frac{1}{2}(150\mu)(\frac{7}{4})V_{ov3}^2$ or $4\times.5\times.6$

$V_{ov3} = .163V$

$5 - .5 - 2(.163) = 4.173V$

$.241V \le V_{out} \le 4.173V$

$R_{in} = \infty\,\Omega$

d.

$r_{o1} = r_{o2} = 12.5M\Omega$

$r_{o3} = r_{o4} = 25M\Omega$

$g_{m2} = 5.657\times10^{-5}$

$g_{mb2} = 5.657\times10^{-6}$

$g_{m3} = 2.454\times10^{-5}$

$g_{mb3} = 2.454\times10^{-6}$

$R_{out} = r_{o1}r_{o2}(g_{m2} + g_{mb2}) \| r_{o3}r_{o4}(g_{m3} + g_{mb3})$

$R_{out} = 6.168\,G\Omega$

$A_v = -g_m R_{out} = -348429.108$ V/V